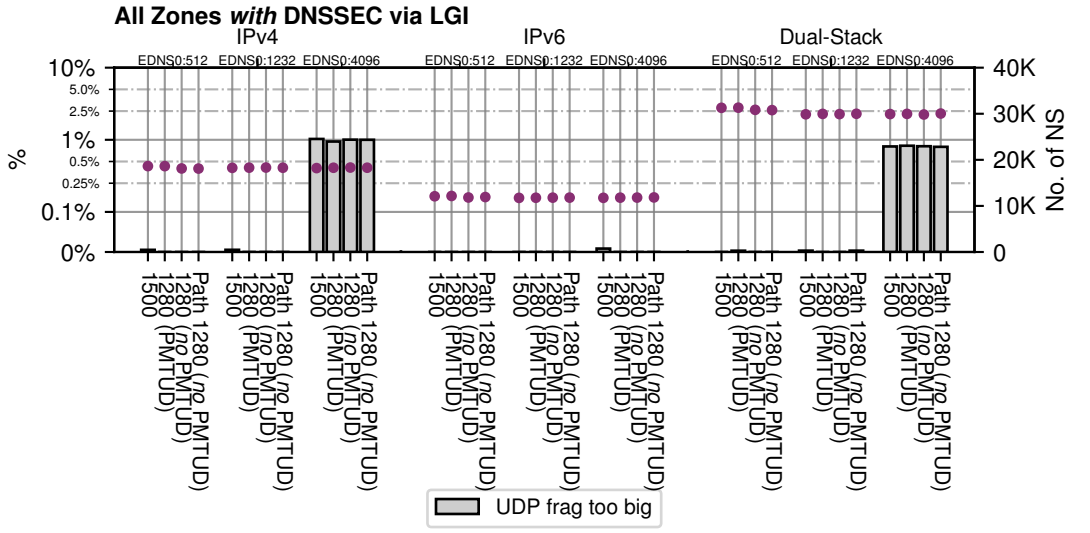
All Zones *with* DNSSEC via LGI
IPv4
IPv6
Dual-Stack
EDNS0:512
EDNS0:1232
EDNS0:4096
10%
5.0%
2.5%
1%
0.5%
0.25%
0.1%
0%
%
40K
30K
20K
10K
0
No. of NS
1500
1280 (PMTUD)
1280 (no PMTUD)
Path 1280 (no PMTUD)
UDP frag too big

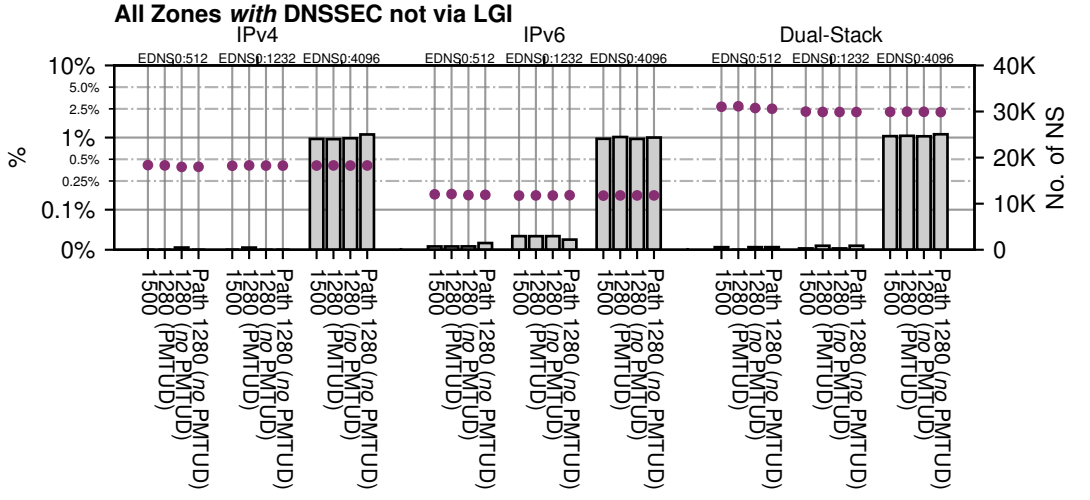
All Zones *with* DNSSEC not via LGI
IPv4
IPv6
Dual-Stack
EDNS0:512
EDNS0:1232
EDNS0:4096
10%
5.0%
2.5%
1%
0.5%
0.25%
0.1%
0%
%
40K
30K
20K
10K
0
No. of NS
1500
1280 (PMTUD)
1280 (no PMTUD)
Path 1280 (no PMTUD)

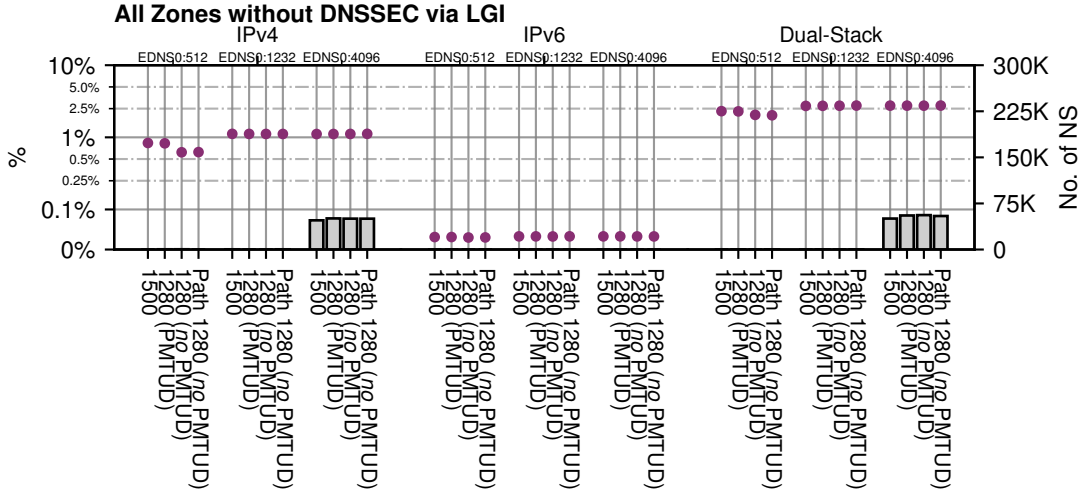
All Zones without DNSSEC via LGI
IPv4
IPv6
Dual-Stack
EDNS0:512
EDNS0:1232
EDNS0:4096
10%
5.0%
2.5%
1%
0.5%
0.25%
0.1%
0%
%
300K
225K
150K
75K
0
No. of NS
1500
1280 (PMTUD)
1280 (no PMTUD)
Path 1280 (no PMTUD)

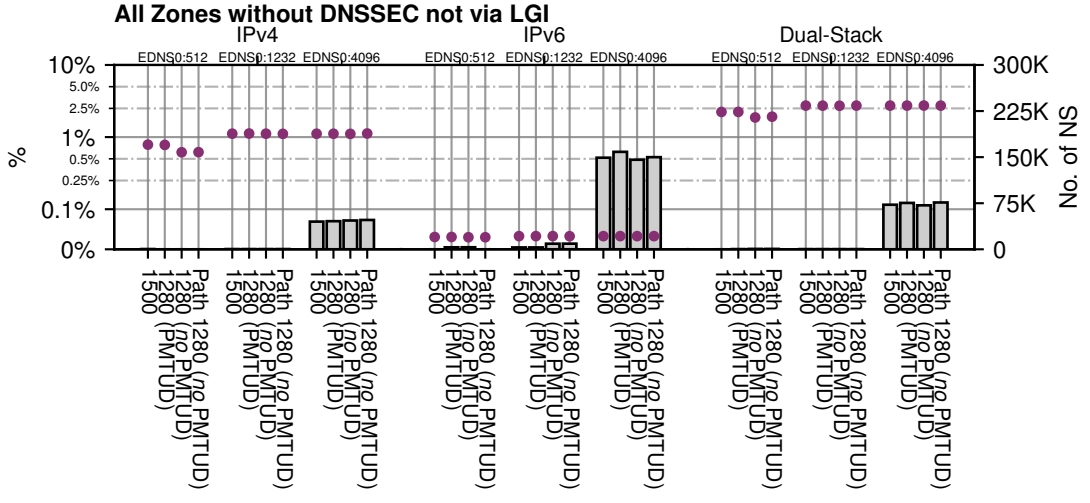
All Zones without DNSSEC not via LGI
IPv4
IPv6
Dual-Stack
EDNS0:512
EDNS0:1232
EDNS0:4096
10%
5.0%
2.5%
1%
0.5%
0.25%
0.1%
0%
%
300K
225K
150K
75K
0
No. of NS
1500
1280 (PMTUD)
1280 (no PMTUD)
Path 1280 (no PMTUD)